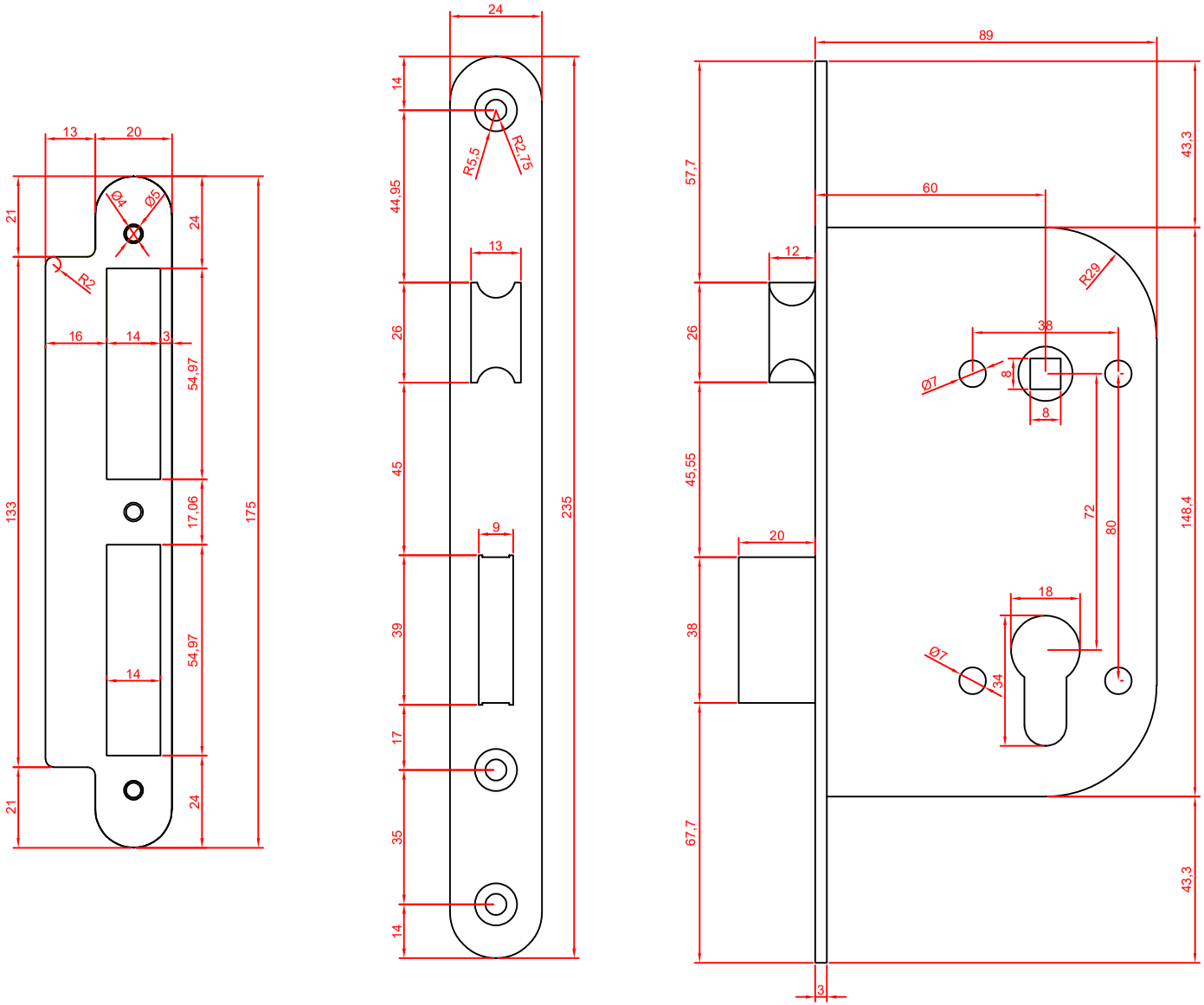

SOLID international www.solidintl.com +32 50 31 36 80	Notes	Drawn by	LJ	PORTIXX - RF30 CYLINDER LOCK - 72/60
		Updated Date	03/04/2025	
		DWG No.	TD - PORTIXX - RF30 CYLINDER LOCK - 72-60 - 310665	
		Ref. No.	310665	